Retail RFID Systems

AdvanSafe-100 ™

RFID loss prevention system

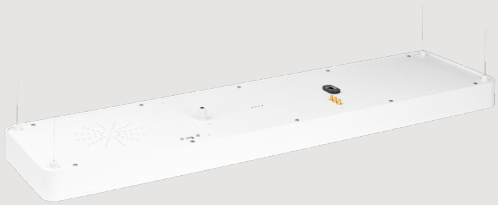

Keonn Technologies S.L.

Tel: +34 931 814 477
info@keonn.com

Barcelona
London
Los Angeles

AdvanSafe-100™
RFID loss prevention system

Video

Benefits:

- Improved store aesthetics, by having a store entrance free from obstacles
- Shrinkage reduction
- Combination of loss-prevention and product identification in one system
- Provides data to detect which product suffer more theft attempts
- Very quick detection
- Continuous detection field
- One master unit can be connected to 1,2 or 3 slave units, which reduces costs
- Plug and play installation

Applications:

- Loss prevention at retail stores
- Loss prevention at warehouses
- Product tracking at backdoors, entrances, corridors, etc.

Product overview

AdvanSafe is a **loss prevention system** based on RFID UHF. It comprises an antenna with an embedded reader, controller and alarm combining loss-prevention and RFID functions in one system.

AdvanSafe detects the tagged items that pass below the antenna, verify if those items have been paid, and triggers an acoustic and/or visual alarm if any item has not been paid.

AdvanSafe can use **four configurations** for checking if a tagged item has been paid:
- Checks the EAS bit of NXP chips
- Checks if the EPC code includes a pre-defined pattern that signals that the product has or not been paid
- Checks against the POS database if the product has been paid
- Checks bulk theft: trigger an alarm if a certain number of tags belonging to the same category are read in a certain time period (e.g. a few seconds).

AdvanSafe comprises a **primary unit** and several **secondary units**:
- The primary unit has an integrated reader, a controller, an alarm, a visual alarm indicator and one directive antenna.
- Each secondary unit comprises one directive antenna and a visual alarm indicator.

As shown in the following illustration, up to 3 secondary units can be connected to one primary unit. This reduces costs for stores with wide entrance.

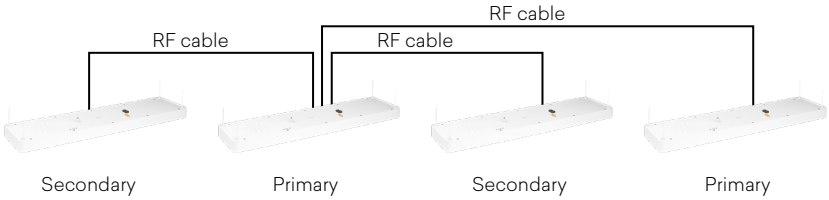

AdvanSafe works with any hard and soft Gen2 RFID UHF tags.

AdvanSafe includes **configurable parameters** for minimizing false alarms.

AdvanSafe can be ordered in 2 models:
- Model with suspended wires
- Model with a ceiling mount

Radiation pattern

To minimize the detection of products inside the store, AdvanSafe has a radiation diagram wide in one direction and narrow in the other (perpendicular) direction.

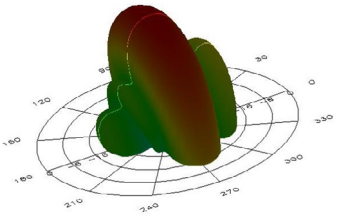

AdvanSafe-100™
RFID loss prevention system

Connection to AdvanCloud

AdvanSafe can be optionally connected to AdvanCloud cloud-based software platform.

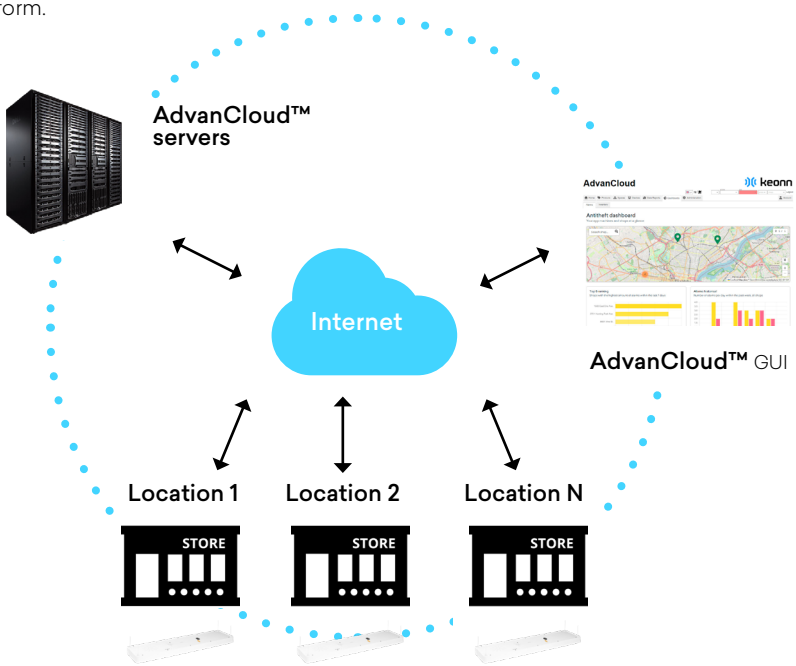

The products that trigger an alarm can be shown on a **smartphone** managed by store staff or security staff, in order to:

- Thwart theft attempts
- Register the event: false alarm, thwarted theft, theft

This information can then be analyzed for **business intelligence** purposes:

- Theft attempts by day and time of day
- Products that suffer more theft attempts
- Stores with more theft activity
- ...

Optionally, AdvanSafe can be connected to a camera and send images of the person passing by when the alarm is triggered, to any smarphone.

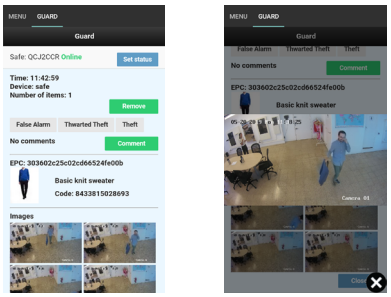

AdvanSafe-100™
RFID loss prevention system

Technical Specifications

Operating Frequency	ETSI (EU) (865.6 - 867.6) MHz FCC (NA, SA) (902 – 928) MHz TRAI(India) (865 - 867) MHz MIC (KR) (910 – 914) MHz ACMA (AU,NZ) (920 – 926) MHz SRRC-MII (P.R.China) (920 – 925) MHz Brazil (902 – 907.5) MHz and (915 – 928) MHz Peru (916– 928) MHz
Detection Height	2 - 3 m (recommended) Maximum: 4 m (Use above heights with caution. Read distance depends highly on tag model and products being used)
Radiation pattern	Fan beam
Beam width	20° / 90°
Polarization	Circular
Alarm Light	Light Emitting Diode (LED)
Alarm Audio	Signal Buzzer
Radiation angle	Fan shape 20° (narrow direction) / 90° (broad direction) -15 dB side lobes
Alarm function Preset	System gives audio and light alarm by detection of any of the EAS supported modes
Power supply	Power over Ethernet Optional: External power supply
Energy Consumption	6 W max., 1,5 W stand by, 0,5 W sleep modus, <5µA power down
Reader Power	max. 31,5 dBm (may be limited to conform to some regulations)
Radiated power	2 W ERP, 3.2 W EIRP
Anticollision	Yes
Interface	Ethernet
Transponder Protocol Standard	EPC Class1 Gen2
Conformity	EN 50364, EN 301 489, EN 302 208 (LBT), EN 300 220
Temperature range	-20°C to +55°C
Dimensions	880 mm x 220 mm x 56 mm 34.6 inches x 8.7 inches x 2.2 inches
Antenna weight	Master unit: 4.300 g Slave unit: 3.900 g
Material Housing	Aluminum and methacrylate
Color	Off white
Human exposure	EN 50364
EMC	EN 301 489, EN 300 220
Air Interface (EU)	EN 302 208 v1.2 (DRM)

Mechanical specifications of the model with suspended wires

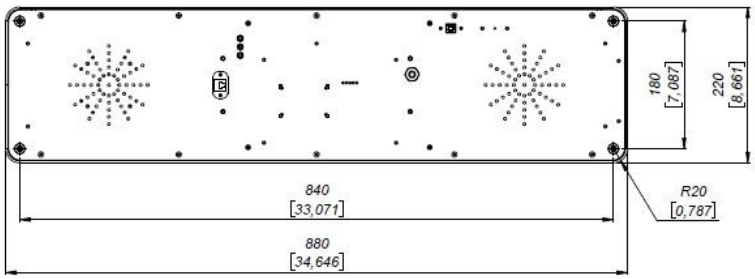

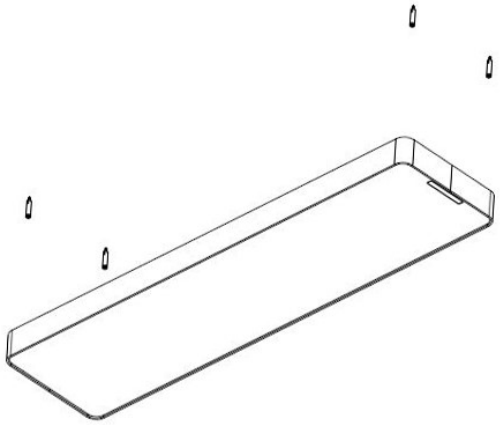

Mechanical specifications of the ceiling mount model

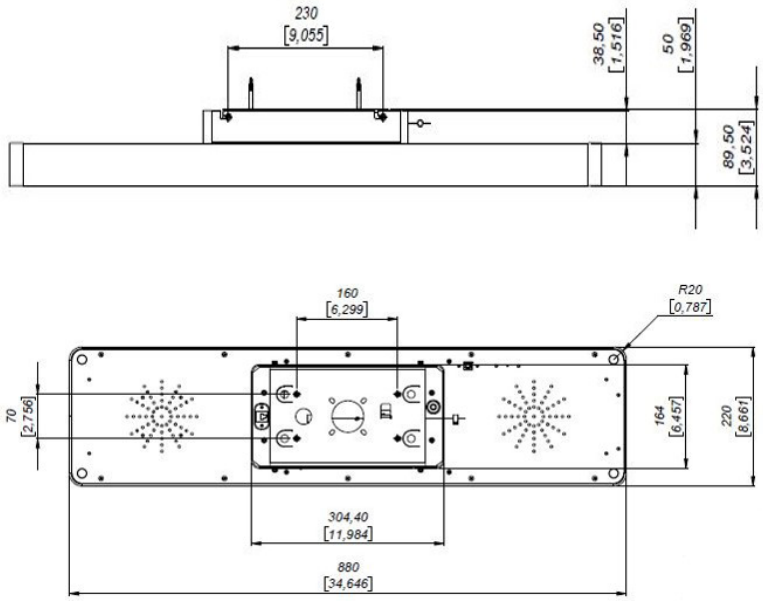

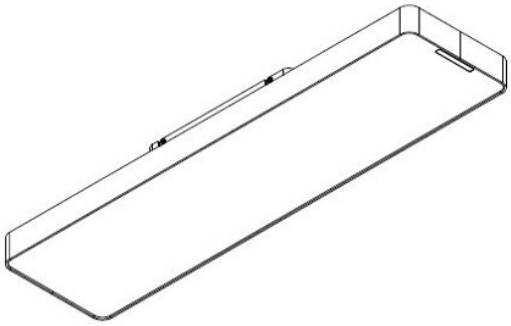

Units in millimeters and [inches]

Product codes for ordering

ADSF	-	o	t	m	FF	-	mmm	
								o = overhead
		o						overhead
								t = type
			m					primary
			s					secondary
								m = mount
				c				Ceiling mount (attached to the ceiling or suspended with a pole, pole not included)
				s				Suspended with metallic wires (included)
								FF = frequency band
					EU			ETSI
					US			FCC
					CH			China
								mmm = model
							100	model number

Examples:

ADSF-omcEU-100:

- AdvanSafe
- Overhead
- Primary unit
- Ceiling mount (attached to the ceiling or suspended with a pole)
- ETSI frequency band
- Model 100

Copyright © Keonn Technologies S.L.
All rights reserved.

Information in this publication supersedes all earlier versions. Specifications subject to change without notice.

Keonn Technologies S.L.

Tel: +34 931 814 477
info@keonn.com

Barcelona
London
Los Angeles